SOLAR **SS | Solar Street Light**

SERIES · SS13000 / SS7000

APPLICATIONS

- Rural & Remote Area
- Residential & Industrial Area
- Security Area Lighting
- Pedestrian Paths & Cycle Lanes

All-in-Two Solar Street Light

A 24 V off-grid luminaire engineered for tropical conditions, in two power classes. MPPT step-up driver, $LiFePO_4$ storage and microwave-based adaptive dimming — each available in 5700 K and 3000 K.

80 / 40 W
LED POWER CLASSES

13,000 lm
MAX. FLUX (80 W · 5700 K)

100 / 60 W
MONO PV · VMP 36 V

Ø64.7 mm
POLE MOUNT



COMMON SPECIFICATIONS

Shared across both power classes and colour temperatures

System Architecture	24 V (25.6 V $LiFePO_4$)	**Charge Controller**	MPPT Step-Up CC Driver
Battery Range	24.0 V – 29.2 V	**Motion Sensor**	Microwave · 8 m H · 10 m R
Housing	Die-cast Aluminium + PC Lens	**Mounting Height**	7 – 8 m
Pole Mount	Ø 64.7 mm	**IP Rating**	IP65 · Ambient max. 50 °C

MODELS

Two power classes × two colour temperatures · ± 5 % lumen tolerance

SPECIFICATION	80 W SS13000C / SS13000W	40 W SS7000C / SS7000W
Part No. · 5700 K	**SS13000C**	**SS7000C**
Part No. · 3000 K	**SS13000W**	**SS7000W**
Lumens at Full Load · 5700 K	13,000 lm · 163 lm/W	7,000 lm · 175 lm/W
Lumens at Full Load · 3000 K	12,000 lm · 150 lm/W	6,500 lm · 163 lm/W
LED Chips	144 PCS · 6S24P · 6 V	96 PCS · 6S16P · 6 V
LFP Battery	24 V · 15 Ah	24 V · 12 Ah
Solar Panel (PV)	100 W Mono · Vmp 36 V	60 W Mono · Vmp 36 V
PV Dimensions	900 × 670 × 25 mm	670 × 540 × 25 mm
Luminaire Size (H×W×D)	696.4 × 233 × 135 mm	672.5 × 200 × 130 mm
Weight	TBA	TBA

DRAWING · 80 W

SS13000 · Unit: mm

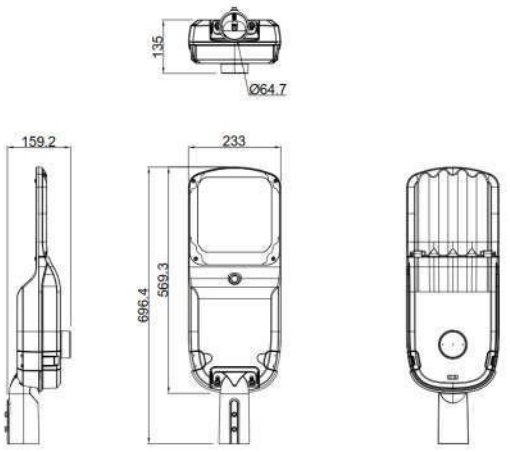

DRAWING · 40 W

SS7000 · Unit: mm

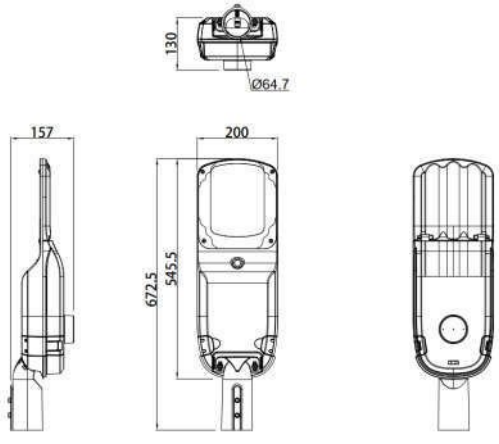

** ± 10 % Lux accuracy · Test environment @ 25 °C · Photometric data available on request · Specifications subject to change without prior notice.*