SPOT LIGHT **SP**

SERIES · SP

APPLICATIONS

- Ports & Terminals
- Tower Cranes
- Stadiums
- High-Mast Towers & Unipoles

SP Spot Light

A long-throw die-cast aluminium spotlight in five wattages from 110 W to 480 W, with 18° to 90° beam options and up to 70,000 lm. IP66 rated for ports, stadiums, high-mast towers and tower cranes.

70,000 lm
LUMINOUS FLUX (5700K)

480 W
MAX. SYSTEM POWER

146 lm/W
PEAK EFFICACY

18–90 °
BEAM ANGLE OPTIONS



COMMON SPECIFICATIONS

Shared across all wattages, colour temperatures and beam angles

CRI	Ra > 80 / R9 > 0	**Input Power (AC)**	180–277 V 50/60 Hz (100–277 V optional)
Power Factor	> 0.95 @ 240 V AC	**Working Temp.**	Ambient max. 50 °C
IP Rating	IP66	**Beam Angles**	18° / 25° / 60° / 75° / 90°
Housing Material	Extruded Aluminium Heat Sink & Optical Lens	**Avg. Beam Angle (50%)**	26.4° / 77.0° (SP70000)
Lumen Tolerance	± 5 %	**Warranty**	3 years

MODELS

Five wattages × two colour temperatures × beam options · ± 5 % lumen tolerance

PART NO.	WATTAGE	COLOUR TEMP.	LUMENS	BEAM	LM / W	INPUT (AC)	SIZE (L×W)	WEIGHT
SP70000C	480 W	**5700 K (Cool)**	70,000	25° / 75°	146	240V @ 2A	350 × 420 mm	15,000 g
SP70000N	480 W	**4000 K (Natural)**	70,000	25° / 75°	146	240V @ 2A	350 × 420 mm	15,000 g
SP70000W	480 W	**3000 K (Warm)**	66,700	25° / 75°	139	240V @ 2A	350 × 420 mm	15,000 g
SP42000C	330 W	**5700 K (Cool)**	42,900	18° / 60° / 90°	130	240V @ 1375mA	530 × 355 mm	9,200 g
SP42000N	330 W	**4000 K (Natural)**	42,900	18° / 60° / 90°	130	240V @ 1375mA	530 × 355 mm	9,200 g
SP42000W	330 W	**3000 K (Warm)**	40,250	18° / 60° / 90°	122	240V @ 1375mA	530 × 355 mm	9,200 g
SP28000C	220 W	**5700 K (Cool)**	28,600	18° / 60° / 90°	130	240V @ 916mA	370 × 355 mm	6,300 g
SP28000N	220 W	**4000 K (Natural)**	28,600	18° / 60° / 90°	130	240V @ 916mA	370 × 355 mm	6,300 g
SP28000W	220 W	**3000 K (Warm)**	26,800	18° / 60° / 90°	122	240V @ 916mA	370 × 355 mm	6,300 g
SP21000C	165 W	**5700 K (Cool)**	21,500	18° / 60° / 90°	130	240V @ 687mA	290 × 355 mm	5,300 g
SP21000N	165 W	**4000 K (Natural)**	21,500	18° / 60° / 90°	130	240V @ 687mA	290 × 355 mm	5,300 g
SP21000W	165 W	**3000 K (Warm)**	20,130	18° / 60° / 90°	122	240V @ 687mA	290 × 355 mm	5,300 g
SP14000C	110 W	**5700 K (Cool)**	14,600	18° / 60° / 90°	130	240V @ 458mA	210 × 355 mm	4,400 g
SP14000N	110 W	**4000 K (Natural)**	14,600	18° / 60° / 90°	130	240V @ 458mA	210 × 355 mm	4,400 g
SP14000W	110 W	**3000 K (Warm)**	13,400	18° / 60° / 90°	122	240V @ 458mA	210 × 355 mm	4,400 g

** ± 10 % Lux accuracy · Test environment @ 25 °C · Specifications subject to change without prior notice · Product images for illustration only.*

MODEL RANGE
Module count rises with wattage · shown to relative scale



SP14000
110 W · 2 modules
14,600 lm



SP21000
160 W · 3 modules
21,500 lm



SP28000
220 W · 4 modules
28,600 lm



SP42000
330 W · 6 modules
42,900 lm



SP70000
480 W · 2 modules
70,000 lm

DIMENSIONAL DRAWINGS
All models · Unit: mm / gram · front, rear, side and top views

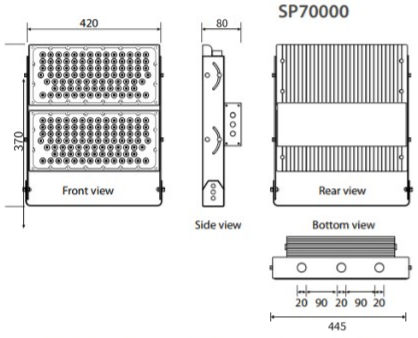

SP70000 350 × 420 mm 15,000 g ± 5 %

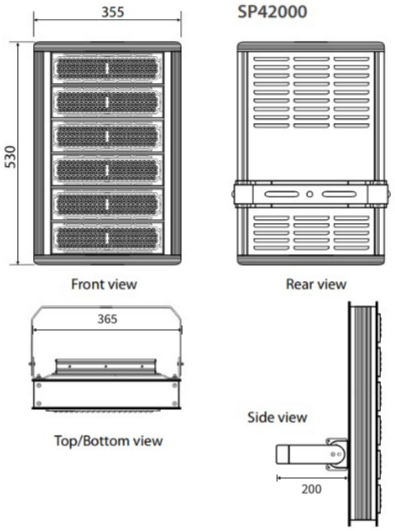

SP42000 530 × 355 mm 9,200 g ± 5 %

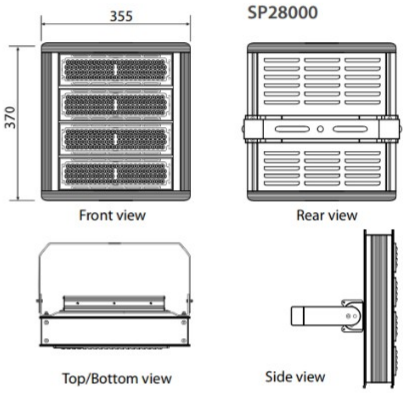

SP28000 370 × 355 mm 6,300 g ± 5 %

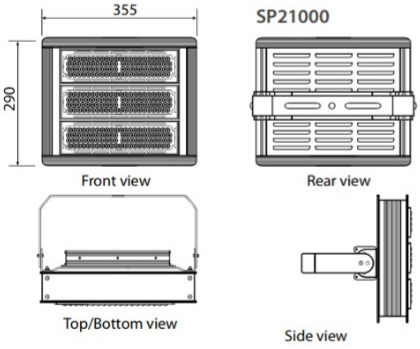

SP21000 290 × 355 mm 5,300 g ± 5 %

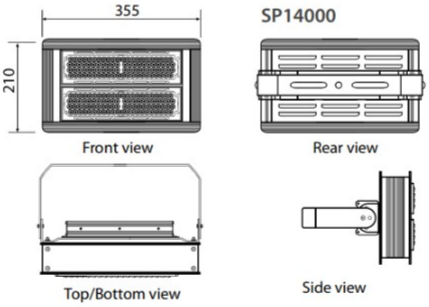

SP14000 210 × 355 mm 4,400 g ± 5 %

BEAM SPREAD
Beam diameter on the working plane · geometric (2H · tan ½θ)

18° **60°** **90°**

Optical options · 18° / 25° / 60° / 75° / 90°

H	18°	25°	60°	75°	90°
5 m	1.6	2.2	5.8	7.7	10.0
10 m	3.2	4.4	11.5	15.3	20.0
15 m	4.8	6.7	17.3	23.0	30.0
20 m	6.3	8.9	23.1	30.7	40.0
25 m	7.9	11.1	28.9	38.4	50.0
30 m	9.5	13.3	34.6	46.0	60.0

** All dimensions in mm · Weights ± 5 % · Beam diameters are geometric (2H·tan½θ).*

CARTON DIMENSIONS & WEIGHTS

Single-unit export carton · unit: mm / kg

ITEM	POWER	QTY	L	W	H	NETT WT.	M³
SP14000	110 W	1	410	310	170	**4.90 kg**	0.022
SP21000	165 W	1	410	310	170	**6.00 kg**	0.022
SP28000	220 W	1	400	400	170	**7.00 kg**	0.027
SP42000	330 W	1	570	400	170	**10.10 kg**	0.039
SP70000	480 W	1	490	490	260	**16.00 kg**	0.062

PALLET LOADING

Block pallet 1,200 × 1,100 mm · max load height 1,700 mm

SP14000

carton 410 × 310 × 170 mm

54 pcs / pallet

6 PER LAYER × 9 LAYERS

Load footprint	**820 × 930 mm**	Nett weight	**265 kg**
Stack height	**1,530 mm**	Volume	**1.17 m³**
With pallet	**1,675 mm**		

SP21000

carton 410 × 310 × 170 mm

54 pcs / pallet

6 PER LAYER × 9 LAYERS

Load footprint	**820 × 930 mm**	Nett weight	**324 kg**
Stack height	**1,530 mm**	Volume	**1.17 m³**
With pallet	**1,675 mm**		

SP28000

carton 400 × 400 × 170 mm

54 pcs / pallet

6 PER LAYER × 9 LAYERS

Load footprint	**1,200 × 800 mm**	Nett weight	**378 kg**
Stack height	**1,530 mm**	Volume	**1.47 m³**
With pallet	**1,675 mm**		

SP42000

carton 570 × 400 × 170 mm

36 pcs / pallet

4 PER LAYER × 9 LAYERS

Load footprint	**1,140 × 800 mm**	Nett weight	**364 kg**
Stack height	**1,530 mm**	Volume	**1.40 m³**
With pallet	**1,675 mm**		

SP70000

carton 490 × 490 × 260 mm

20 pcs / pallet

4 PER LAYER × 5 LAYERS

Load footprint	**980 × 980 mm**	Nett weight	**320 kg**
Stack height	**1,300 mm**	Volume	**1.25 m³**
With pallet	**1,445 mm**		

** Pallet plans assume a 145 mm block pallet 1,200 × 1,100 mm, cartons laid flat and stretch-wrapped · Carton dimensions and weights ± 5 %*