

APPLICATIONS: Warehouse, Factory, Shopping Mall, Car Park, Indoor Sports Center...

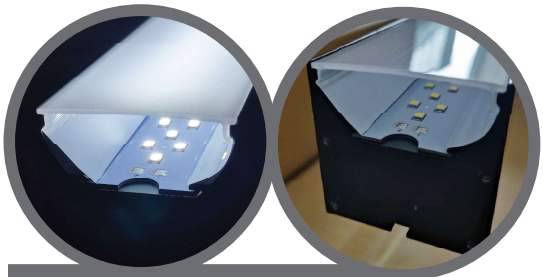

Built-in LED light!
T8 or T5 tubes not required!

Installation Instructions

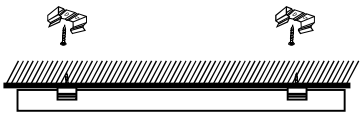

Surface Mounting
Step 1 : Secure the brackets to the ceiling.
Step 2 : Clip the housing onto the brackets.

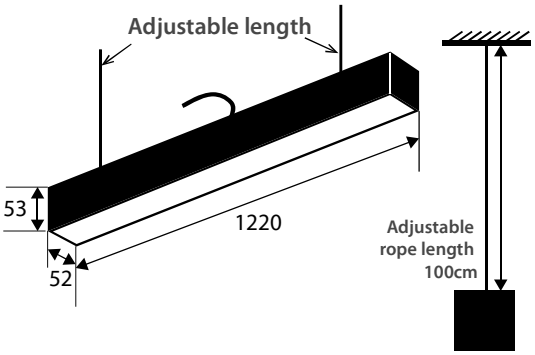

	LL | Linear Light
CRI	Ra > 80 / R9 > 0
Input Power (AC)	180-265V 50/60Hz (100-277V 50/60Hz Optional)
Power Factor	> 0.95 @240VAC
Working Temp	Ambient Temperature Max 50°C
Projection Angle	110°
Housing Material	Aluminium & Frosted Cover

LL7800C

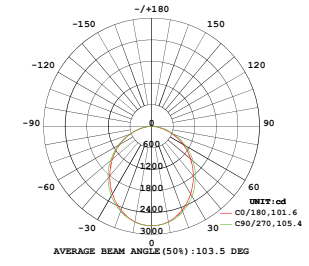

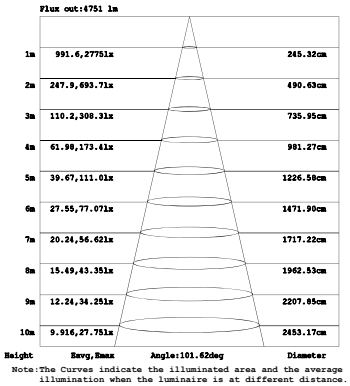

Part No	Wattage	Colour Temp	Lumens (± 5%)	Lumens Per Watt	Input Power (AC)	Dimension / Size	Weight	Warranty
LL4500C	37.5	6500K	4500	120	240V @ 458mA	1200mm (L) x 50mm (W) x 50mm(H)	1750g	2 Years
LL4500N		4000K						
LL4500W		3000K	4200	112				
LL7800C	65	6500K	7800	120	240V @ 916mA			
LL7800N		4000K						
LL7800W		3000K	7280	112				

Note: * ± 10% Lux accuracy * Test environment @ 25 °C *Specifications subject to change without prior notice. * Product images are for illustraton purposes only.