UFO HIGHBAY HU

SERIES · HU

APPLICATIONS

- Warehouses
- Shopping Malls
- Factories
- Indoor Sports Centres

HU UFO Highbay Light

A die-cast aluminium UFO highbay in four wattages from 65 W to 210 W, with 60° and 90° reflector options and up to 31,500 lm. IP65 rated for warehouses, factories, malls, car parks and indoor sports centres.

31,500 lm
LUMINOUS FLUX (5700K)

210 W
MAX. SYSTEM POWER

156 lm/W
PEAK EFFICACY

60 / 90 °
PROJECTION ANGLES

IP65



SERIES · HU

COMMON SPECIFICATIONS

Shared across all wattages, colour temperatures and projection angles

CRI	Ra > 80 / R9 > 0	**Input Power (AC)**	100–277 V 50/60 Hz
Power Factor	> 0.95 @ 240 V AC	**Working Temp.**	Ambient max. 50 °C
IP Rating	IP65	**Projection Angles**	60° / 90°
Housing Material	Die Cast Aluminium Base (Heat Sink) & Lens	**Driver Current**	Per model — see table
Lumen Tolerance	± 5 %	**Warranty**	3 years

MODELS

Four wattages × two colour temperatures × 60° / 90° optics · ± 5 % lumen tolerance

PART NO.	WATTAGE	COLOUR TEMP.	LUMENS	LM / W	ANGLE	DRIVER	SIZE (H × Ø)	WEIGHT
HU30000C-60	210 W	**5700 K (Cool)**	29,500	144	**60°**	900 mA	185 (H) × 345 Ø	3,000 g
HU30000C-90	210 W	**5700 K (Cool)**	31,500	150	**90°**	900 mA	185 (H) × 345 Ø	3,000 g
HU30000W-60	210 W	**3000 K (Warm)**	27,400	131	**60°**	900 mA	185 (H) × 345 Ø	3,000 g
HU30000W-90	210 W	**3000 K (Warm)**	29,300	139	**90°**	900 mA	185 (H) × 345 Ø	3,000 g
HU24000C-60	160 W	**5700 K (Cool)**	23,000	144	**60°**	690 mA	182 (H) × 300 Ø	2,550 g
HU24000C-90	160 W	**5700 K (Cool)**	25,000	156	**90°**	690 mA	182 (H) × 300 Ø	2,550 g
HU24000W-60	160 W	**3000 K (Warm)**	21,400	134	**60°**	690 mA	182 (H) × 300 Ø	2,550 g
HU24000W-90	160 W	**3000 K (Warm)**	23,200	145	**90°**	690 mA	182 (H) × 300 Ø	2,550 g
HU15000C-60	105 W	**5700 K (Cool)**	14,700	140	**60°**	440 mA	180 (H) × 250 Ø	1,600 g
HU15000C-90	105 W	**5700 K (Cool)**	15,750	150	**90°**	440 mA	180 (H) × 250 Ø	1,600 g
HU15000W-60	105 W	**3000 K (Warm)**	13,650	130	**60°**	440 mA	180 (H) × 250 Ø	1,600 g
HU15000W-90	105 W	**3000 K (Warm)**	14,650	139	**90°**	440 mA	180 (H) × 250 Ø	1,600 g
HU9300C-60	65 W	**5700 K (Cool)**	8,970	138	**60°**	270 mA	180 (H) × 250 Ø	1,600 g
HU9300C-90	65 W	**5700 K (Cool)**	9,750	150	**90°**	270 mA	180 (H) × 250 Ø	1,600 g
HU9300W-60	65 W	**3000 K (Warm)**	8,320	128	**60°**	270 mA	180 (H) × 250 Ø	1,600 g
HU9300W-90	65 W	**3000 K (Warm)**	9,100	140	**90°**	270 mA	180 (H) × 250 Ø	1,600 g

** ± 10 % Lux accuracy · Test environment @ 25 °C · Specifications subject to change without prior notice · Product images for illustration only.*

DIMENSIONAL DRAWINGS All models · Unit: mm / gram · side and bottom views

HU30000 210 W

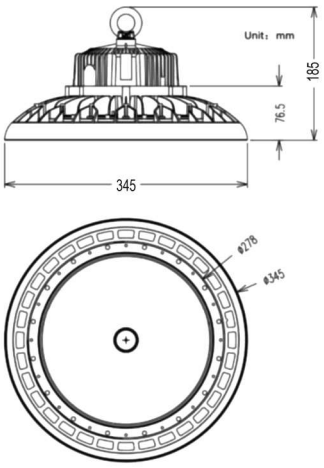

H 185 · Ø 345 body 76.5 · Ø 345 / 278
3,000 g ± 5 %

HU24000 160 W

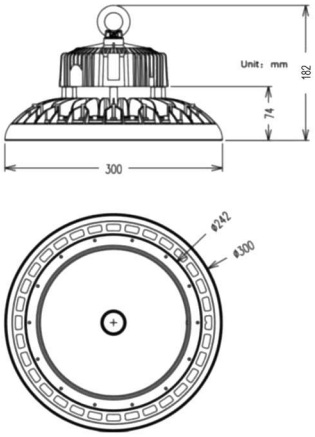

H 182 · Ø 300 body 74 · Ø 300 / 242
2,550 g ± 5 %

HU15000 / HU9300 105 W / 65 W

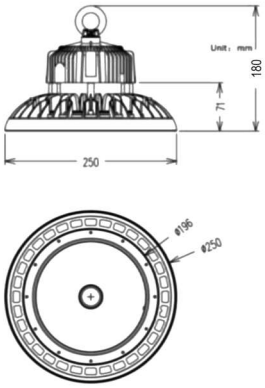

H 180 · Ø 250 body 71 · Ø 250 / 196
1,600 g ± 5 %

LUMINOUS INTENSITY DISTRIBUTION Candela distribution per reflector option · C0–C180 planes

60° narrow · high-bay

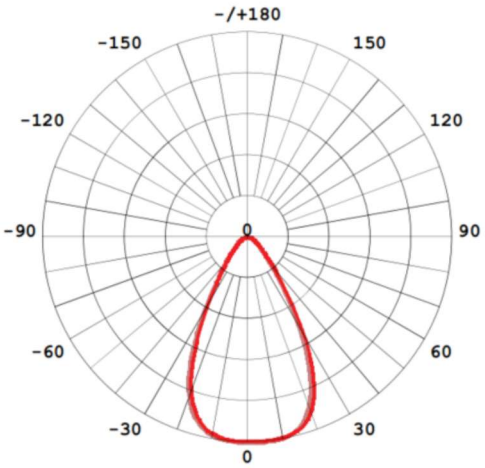

90° wide · low-bay

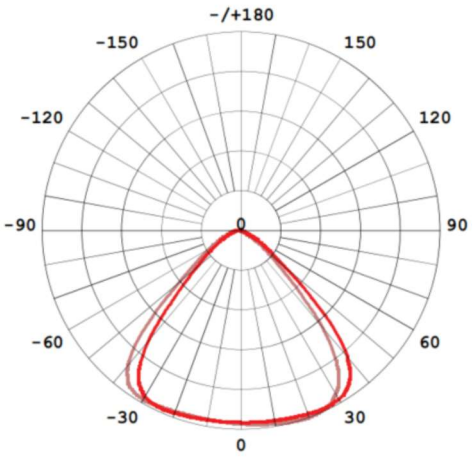

BEAM COVERAGE Beam diameter on the working plane · geometric estimate (2H · tan ½θ), not measured illuminance

MOUNTING HEIGHT	5 M	6 M	8 M	10 M	12 M
60° · Ø m	5.8	6.9	9.2	11.5	13.9
90° · Ø m	10.0	12.0	16.0	20.0	24.0

** All dimensions in mm · Weights ± 5 % · Coverage figures are geometric (2H·tan½θ), not measured luminous intensity distribution.*

CARTON DIMENSIONS & WEIGHTS

Single-unit export carton · unit: mm / kg

ITEM	POWER	QTY	L	W	H	NETT WT.	M³
HU9300	65 W	1	285	285	175	**1.90 kg**	0.014
HU15000	105 W	1	285	285	175	**1.90 kg**	0.014
HU24000	160 W	1	350	350	175	**3.05 kg**	0.021
HU30000	210 W	1	400	400	175	**3.70 kg**	0.028

PALLET LOADING

Block pallet 1,200 × 1,100 mm · max load height 1,700 mm

HU9300

carton 285 × 285 × 175 mm

96 pcs / pallet

12 PER LAYER × 8 LAYERS

Load footprint	1,140 × 855 mm	Nett weight	182 kg
Stack height	1,400 mm	Volume	1.36 m³
With pallet	1,545 mm		

HU15000

carton 285 × 285 × 175 mm

96 pcs / pallet

12 PER LAYER × 8 LAYERS

Load footprint	1,140 × 855 mm	Nett weight	182 kg
Stack height	1,400 mm	Volume	1.36 m³
With pallet	1,545 mm		

HU24000

carton 350 × 350 × 175 mm

72 pcs / pallet

9 PER LAYER × 8 LAYERS

Load footprint	1,050 × 1,050 mm	Nett weight	220 kg
Stack height	1,400 mm	Volume	1.54 m³
With pallet	1,545 mm		

HU30000

carton 400 × 400 × 175 mm

48 pcs / pallet

6 PER LAYER × 8 LAYERS

Load footprint	1,200 × 800 mm	Nett weight	178 kg
Stack height	1,400 mm	Volume	1.34 m³
With pallet	1,545 mm		

** Pallet plans assume a 145 mm block pallet 1,200 × 1,100 mm, cartons laid flat and stretch-wrapped · Carton dimensions and weights ± 5 %*