FLOODLIGHT FL

SERIES · FL

APPLICATIONS

- Billboards & Signage
- Building & Façade Lighting
- Landscape Lighting
- General Outdoor Areas

FL Floodlight

A die-cast aluminium floodlight with thermal-shock-resistant tempered glass and 110° projection angle, in five wattages from 13.5W to 210W. IP66 rated for billboards, façades and open outdoor areas.

31,000 lm
LUMINOUS FLUX (5700K)

210 W
MAX. SYSTEM POWER

148 lm/W
PEAK EFFICACY

110 °
PROJECTION ANGLE



COMMON SPECIFICATIONS

Shared across all wattages and colour temperatures

CRI	Ra > 80 / R9 > 0	**Input Power (AC)**	180–265 V 50/60 Hz (100–277 V optional)
Power Factor	> 0.9 @ 240 V AC	**Working Temp.**	Ambient max. 50 °C
IP Rating	IP66	**Projection Angle**	110°
Housing Material	Die-cast aluminium base (heatsink) & glass	**Avg. Beam Angle (50%)**	112.6° (FL31000)
Lumen Tolerance	± 5 %	**Warranty**	3 yr (FL8300–FL31000) 2 yr (FL1400 / FL2800)

MODELS

Five wattages × two colour temperatures · ± 5 % lumen tolerance

PART NO.	WATTAGE	COLOUR TEMP.	LUMENS	LM / W	SIZE (L×W×H)	WEIGHT
FL31000C	210 W	5700 K (Cool)	31,000	148	400 × 360 × 53.5 mm	5,350 g
FL31000W	210 W	3000 K (Warm)	28,800	138	400 × 360 × 53.5 mm	5,350 g
FL17000C	120 W	5700 K (Cool)	17,000	141	345 × 295 × 54.6 mm	3,600 g
FL17000W	120 W	3000 K (Warm)	15,800	131	345 × 295 × 54.6 mm	3,600 g
FL8300C	65 W	5700 K (Cool)	8,300	128	265 × 220 × 47.5 mm	2,100 g
FL8300W	65 W	3000 K (Warm)	7,880	122	265 × 220 × 47.5 mm	2,100 g
FL2800C	27 W	5700 K (Cool)	2,800	104	190 × 152 × 40 mm	800 g
FL2800W	27 W	3000 K (Warm)	2,600	97	190 × 152 × 40 mm	800 g
FL1400C	13.5 W	5700 K (Cool)	1,400	104	140 × 107 × 32 mm	400 g
FL1400W	13.5 W	3000 K (Warm)	1,300	97	140 × 107 × 32 mm	400 g

** ± 10 % Lux accuracy · Test environment @ 25 °C · Specifications subject to change without prior notice · Product images for illustration only.*

DRAWINGS & PHOTOMETRICS

All models · Unit: mm / gram · drawings shown to relative scale

FL31000 5,350 g ± 5 %

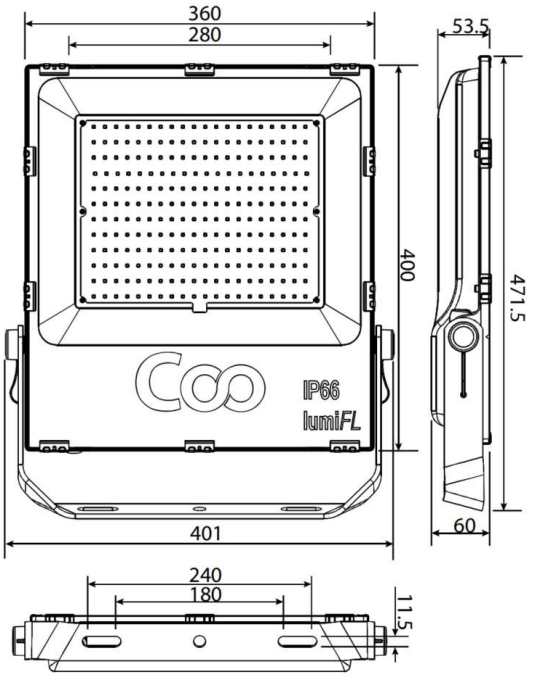

FL17000 3,600 g ± 5 %

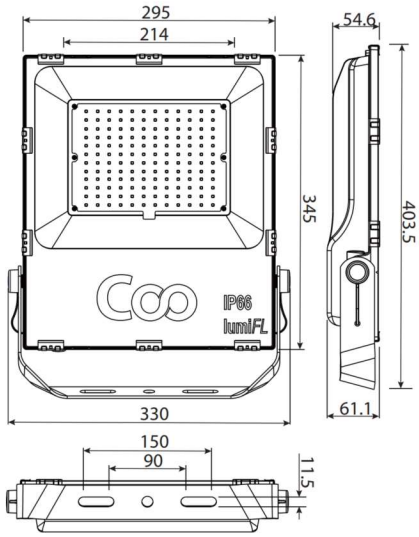

FL2800 800 g ± 5 %

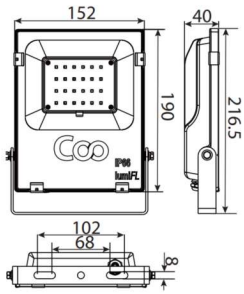

FL8300 2,100 g ± 5 %

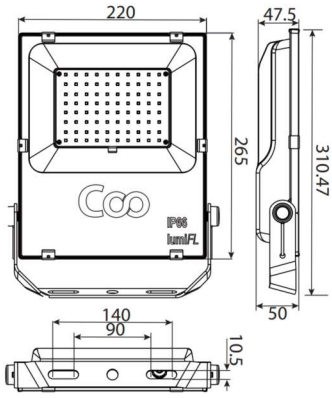

FL1400 400 g ± 5 %

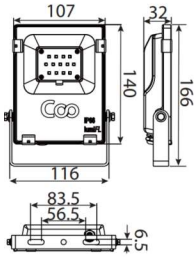

FL31000
Luminous Intensity Distribution Diagram

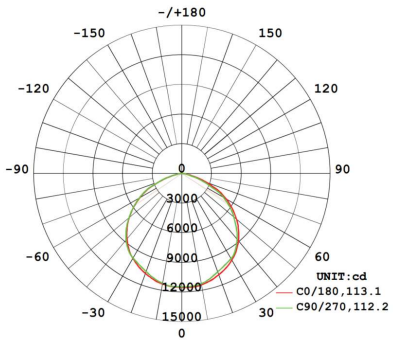

Average Beam Angle (50%): 112.6°

Cone Diagram for FL31000

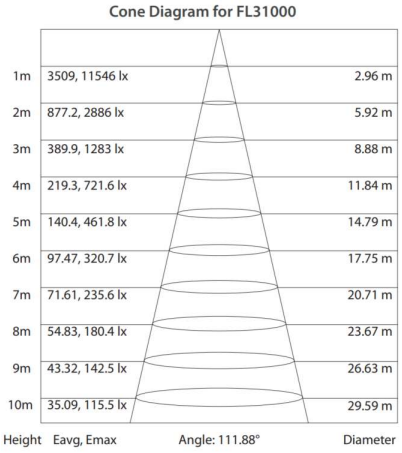

ILLUMINANCE BY HEIGHT

H	Ø M	E AVG	E MAX
1 m	2.96	3,509	11,546
2 m	5.92	877.2	2,886
3 m	8.88	389.9	1,283
4 m	11.84	219.3	721.6
5 m	14.79	140.4	461.8
6 m	17.75	97.47	320.7
7 m	20.71	71.61	235.6
8 m	23.67	54.83	180.4
9 m	26.63	43.32	142.5
10 m	29.59	35.09	115.5

** All dimensions in mm · Weights ± 5 % · Models drawn to relative scale · Photometric data for FL31000.*

CARTON DIMENSIONS & WEIGHTS

Single-unit export carton · unit: mm / kg

ITEM	POWER	QTY	L	W	H	NETT WT.	M³
FL31000	210 W	1	550	460	110	**6.00 kg**	0.028
FL17000	120 W	1	465	360	105	**4.20 kg**	0.018
FL8300	65 W	1	350	260	55	**2.20 kg**	0.005
FL2800	27 W	1	250	178	45	**0.90 kg**	0.002
FL1400	13.5 W	1	200	135	35	**0.45 kg**	0.001

PALLET LOADING

Block pallet 1,200 × 1,100 mm · max load height 1,700 mm

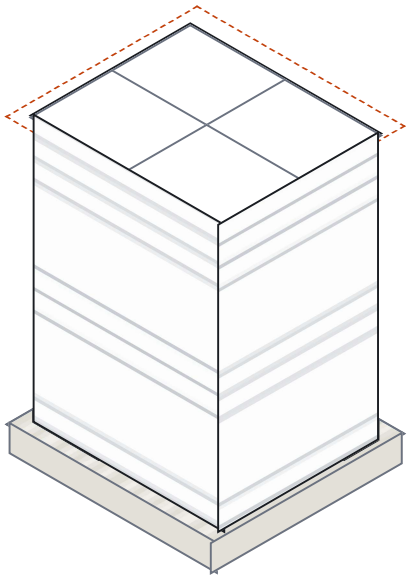

Dashed outline · 1,700 mm load envelope

FL31000 carton 550 × 460 × 110 mm

56 pcs / pallet
4 PER LAYER × 14 LAYERS
Block stack · 2 × 2

Load footprint	**1100 × 920 mm**
Stack height	**1,540 mm**
With pallet	**1,685 mm**
Nett weight	**336 kg**
Volume	**1.56 m³**

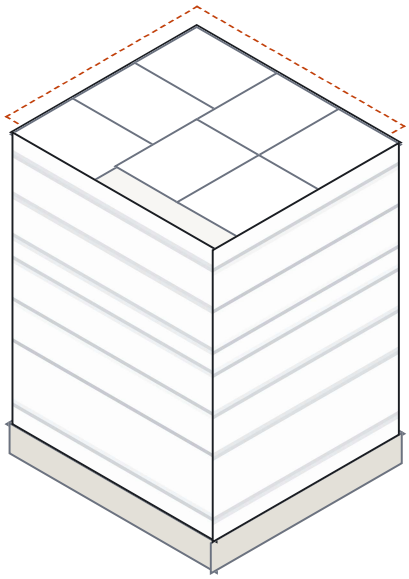

Dashed outline · 1,700 mm load envelope

FL17000 carton 465 × 360 × 105 mm

98 pcs / pallet
7 PER LAYER × 14 LAYERS
Interlocked · 3 + 4

Load footprint	**1185 × 1080 mm**
Stack height	**1,470 mm**
With pallet	**1,615 mm**
Nett weight	**412 kg**
Volume	**1.72 m³**

** Pallet plans assume a 145 mm block pallet 1,200 × 1,100 mm, cartons laid flat and stretch-wrapped · Carton dimensions and weights ± 5 % · Nett weight excludes pallet*