DC FLOODLIGHT FD

SERIES · FD

APPLICATIONS

- Vehicles
- Battery Operated
- Machinery
- Solar Systems

FD DC Floodlight

A 12–30 V DC floodlight for vehicles, machinery and battery or solar systems. Die-cast aluminium heatsink with tempered glass, 110° projection and IP66 protection, in 27 W and 60 W.

7,700 lm
LUMINOUS FLUX (5700K)

60 W
MAX. SYSTEM POWER

128 lm/W
PEAK EFFICACY

12–30 V DC
INPUT VOLTAGE

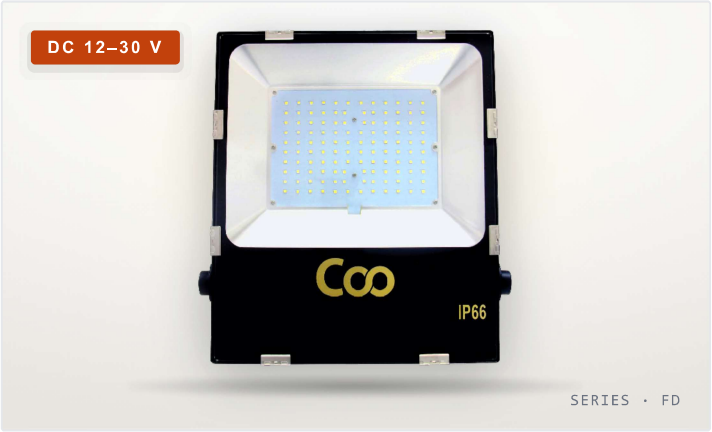

COMMON SPECIFICATIONS

Shared across both wattages and colour temperatures

CRI	Ra > 80 / R9 > 0	**Input Power (DC)**	12–30 V DC
Power Efficiency	92 %	**Working Temp.**	Ambient max. 50 °C
IP Rating	IP66	**Projection Angle**	110°
Housing Material	Die-cast aluminium base (heatsink) & glass	**Warranty**	3 years

MODELS

Two wattages × two colour temperatures

PART NO.	WATTAGE	COLOUR TEMP.	LUMENS	LM / W	SIZE (L×W×H)	WEIGHT
FD8300C	60 W	5700 K (Cool)	7,700	128	265 × 220 × 47.5 mm	2,100 g
FD8300W	60 W	3000 K (Warm)	7,320	122	265 × 220 × 47.5 mm	2,100 g
FD2800C	27 W	5700 K (Cool)	2,800	104	190 × 152 × 40 mm	800 g
FD2800W	27 W	3000 K (Warm)	2,600	97	190 × 152 × 40 mm	800 g

DIMENSIONAL DRAWINGS

Unit: mm / gram · shown to relative scale

FD8300 60 W · 2,100 g ± 5 %

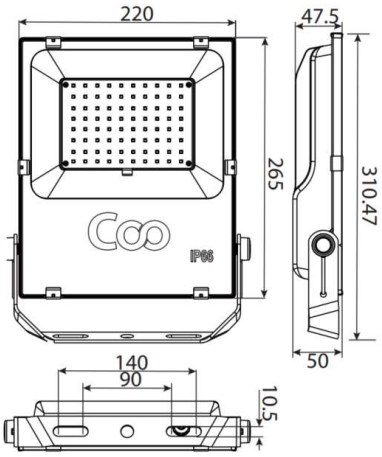

FD2800 27 W · 800 g ± 5 %

